Data Sheet

Article number: 203380M1080B1S
Description: E+G levelling foot
GN 33-80-M10-80-B1-S, Stainless steel
Note: S Without nut, External hexagon at the bottom

Measures

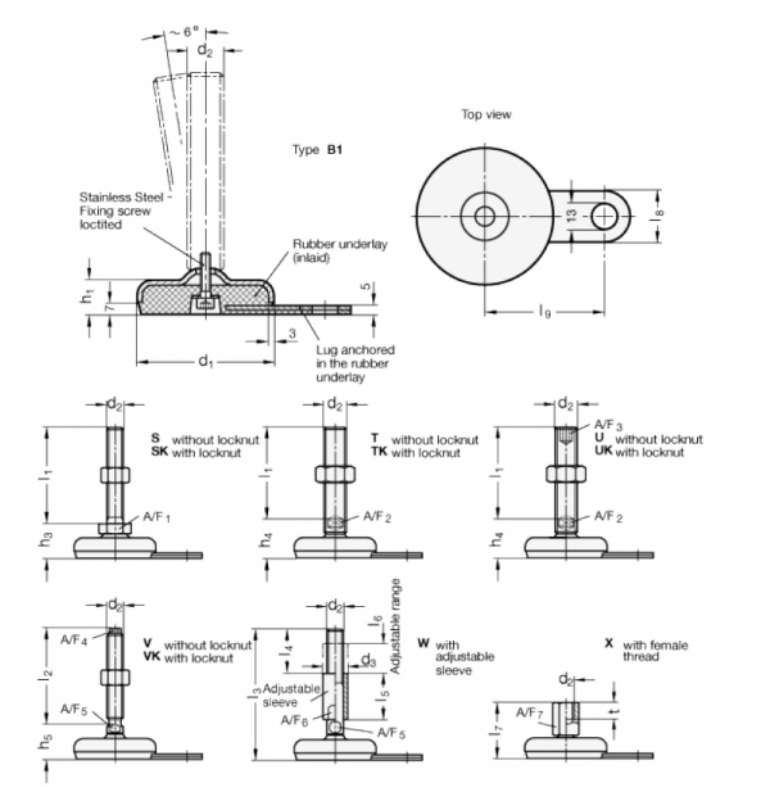

A/F1 = 17
d1 = 80
d2 = M10
h1 = 20
h3 = 28
l1 = 80
l8 = 30
l9 = 70

Product drawings and brochures of any kind may contain errors for which Brd. Klee A/S cannot be liable.